# Wearable FSR-Based Insole for Real-Time Detection of Gait Eve nts in Rehabilitation

Muhamad Amirul Sunni Rohim
Pattern Recognition and Robotics Automation iKohza,
Malaysia-Japan International Institute of Technology,
Universiti Teknologi Malaysia
Kuala Lumpur, Malaysia
amirul.sunni@gmail.com

Nurhazimah Nazmi*
Pattern Recognition and Robotics Automation iKohza,
Malaysia-Japan International Institute of Technology,
Universiti Teknologi Malaysia
Kuala Lumpur, Malaysia
nurhazimah@utm.my

Muhammad Kashfi Shabdin
Division of Advanced Applied Physics,
Institute of Engineering,
Tokyo University of Agriculture and Technology,
Koganei, Japan
kashfi.shabdin@upm.edu.my

Aizreena Azaman
Dept. of Biomedical Engineering & Health Science,
Universiti Teknologi Malaysia
Kuala Lumpur, Malaysia
aizreena@utm.my

2025 IEEE 8th International Conference on Electrical, Control and Computer Engineering (InECCE) | 979-8-3315-2023-6/25/$31.00 ©2025 IEEE | DOI: 10.1109/INECCE64959.2025.11151049

***Abstract*— Stroke survivors and individuals with cerebral palsy (CP) often encounter gait irregularities due to their impaired ability to control ankle mobility. Strengthening ankle plantar flexor muscles is crucial for maintaining forward and vertical movement of the body's center of mass, allowing efficient energy transfer during walking. While accelerometers are widely utilized, they necessitate signal processing in order to extract valuable data. In contrast, Force Sensing Resistors (FSR), attached directly to the foot, offer a more direct and reliable method for detecting gait events by measuring foot-ground contact forces. Therefore, this study aims to develop an insole-based monitoring system that provides feedback on ankle plantar flexion during gait monitoring, based on heel strike (HS) and toe off (TO) timing. Unlike commercial FSR insoles focused on weight tracking and pressure distribution, this system will target gait pattern analysis for individuals could not control the ankle plantar flexion. Data collected over a 6-second walking trial demonstrated consistent and accurate detection of HS and TO events, with clear transitions between gait phases. The binary FSR signals were successfully translated into continuous gait phase data, with phase durations aligning with normal walking condition approximately 60% in stance and 40% in swing. Meanwhile, EMG analysis showed increased TA muscle activity during swing, supporting its role in dorsiflexion, while mGas activated in late stance, reflecting its function in plantarflexion for push-off. These findings confirm physiological accuracy and demonstrate coordination between antagonist muscles during walking. The integrated FSR-EMG approach offers a reliable framework for real-time gait monitoring, with potential for clinical applications such as foot drop detection and personalized gait retraining. Future work includes threshold optimization, machine learning classification, real-time feedback, and clinical validation.**

**Keywords— FSR, Wearable Insole, Gait Events, EMG signals, Rehabilitation**

## I. Introduction

People who have cerebral palsy (CP), have had a stroke, or are elderly often have difficulty using their plantar flexors effectively while walking due to a lack of neuromuscular control. For individuals with CP, which is the most common movement disorder that starts in childhood, there is a general consensus among medical professionals that problems with the muscles that flex the foot downward (plantar flexors) commonly contribute to difficulties with walking [1]. This can make it challenging for individuals with CP to lead an active lifestyle and can also increase their risk of experiencing various negative effects associated with lack of physical activity, such as eventually losing the ability to walk independently. Meanwhile, stroke, commonly referred to as cerebrovascular illness, ranks as the third most common cause of death in Malaysia [2]. Foot drop is the predominant gait abnormality experienced by individuals who have suffered a stroke. People with foot drop often have poor neuromuscular control to effectively engage their plantar flexors while walking. Put simply, they are unable to control the movement of their foot, particularly the inward or outward motion of the ankle. As a result, the swinging motion intensifies to avoid stumbling on the ground while swinging, and the body's inclination also becomes more pronounced in the forward direction compared to a normal walking pattern. More specifically, the two major complications of foot drop are slapping of the foot after heel strike (HS), stance phase and dragging of the toe during swing phase, toe off (TO). Therefore, interventions aimed at enhancing the neuromuscular control of the ankle's plantar flexors could greatly influence the long-term mobility of individuals who have diminished motor control in that area.

Several biofeedback systems have been developed to aid individuals who have encountered challenges with their ankle plantar flexors [3, 4]. These systems have the objective of regulating the position, force, or motor function of the upper or lower limbs. Until now, the majority of biofeedback research has focused on enhancing the regulation of lower-limb muscles using an EMG-based system [5-7]. This system allows users to observe their muscle activity in real-time. Although EMG-based biofeedback offers direct feedback on the intended outcome of increased muscle activity, there are several significant limitations to this modality that restrict its widespread use in clinical or home settings. These limitations include the presence of motion artifact noise when walking, reliability challenges related to the interface between the skin and electrodes (such as hair and sweating), the complexity and necessity of correctly placing the sensors in the appropriate anatomical locations (especially when dealing



Authorized licensed use limited to: Malta College of ArtsScience&Tech. Downloaded on November 24,2025 at 11:30:04 UTC from IEEE Xplore. Restrictions apply.

with small limbs), and the high cost associated with acquiring an EMG system. In addition, this method of gait training has not been widely implemented in clinical practice [1]. Biofeedback techniques that can effectively enhance the activation of the muscles responsible for plantar flexion during gait training would probably be highly desirable. An alternative to using EMG for biofeedback in measuring ankle plantar flexor could be a system that relies on measuring plantar pressure under the foot. This system would provide feedback on the changes in pressure exerted by the forefoot as a result of muscle recruitment in the plantar flexors.

A comprehensive review of the use of wearables in the rehabilitation of individuals with stroke found that pressure sensors, accelerometers and activity monitors are commonly used, especially in hospital-based and inpatient settings [8]. Nonetheless, accelerometers presence a drift error computed by a double numerical integration of the signal, need a gravity compensation and calibration procedure in the computation of body segment acceleration and sensor placement on the body, respectively [9]. The reliability and accuracy of accelerometers are significantly influenced by their placement, with better measurements observed when positioned at the distal parts of the lower limbs [10]. Meanwhile, pressure sensors such as force sensitive sensor (FSR) provide a direct measurement of foot contact and have lower errors in gait event detection, particularly in detection of HS compared to accelerometer [11]. FSRs are affordable and can be easily integrated into most types of footwear. In 2021, Lee and Son [12] successfully developed smart safety shoes equipped with FSR that accurately monitor the weight being carried by construction workers. An FSR-based wireless insole device was created to accurately measure the pressure exerted on the sole of the foot during everyday activities, specifically while standing and walking [13]. In addition, a FeetMe monitor insole, which combines pressure sensors and an inertial measuring unit, has been validated in healthy adults [14]. Later, it has also been tested in after-stroke patients [15], individuals with Parkinson's disease [16], those with multiple sclerosis [17], and chronic stroke patients [18]. While pressure sensors can assist in controlling muscle activity in the ankle while walking for those with chronic ankle instability [19], there has been limited investigation into the measurement of ankle plantar flexion, particularly employing FSR. Thus, the utilization of FSR biofeedback can be investigated to assess the accessibility of neuromuscular gait training by offering a feasible alternative that can be employed in both clinical environments and residential settings.

Insoles equipped with pressure sensors have emerged as a viable technique for providing biofeedback on ankle plantar flexor activity, as they provide direct data on the foot. Although pressure sensors such as FSRs integrated into insoles have proven to be efficient in measuring weight and sensing pressure while standing and walking, there is a lack of studies on ankle plantar flexion. During rehabilitation, it is crucial to accurately identify the gait of those who have experienced ankle dysfunction. This technique is expected to greatly enhance the effectiveness of rehabilitation by improving the outcomes. Therefore, this research examined the monitoring system integrated into the insole to detect the FSR response in real-time and evaluated the performance with muscle activation signals known as electromyography (EMG).

## II. METHODOLOGY

### A. Hardware

#### i. System overview

The insole-based gait monitoring system consists of four main components: a force-sensing insole, a data acquisition and processing unit, a wireless communication module, and a data visualization and analysis platform as illustrated in Figure 1.

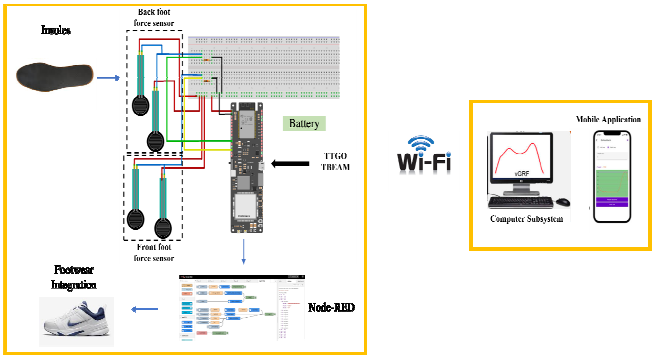


Figure 1 : Overview of the insole-based monitoring system

#### ii. Force-Sensing Insole

The force-sensing insole was developed by using four FSRs strategically placed at the heel, metatarsal 1, midfoot, and hallux regions to detect human gait cycles. The FSR 402 model from Interlink Electronics were used, featuring a 0.6" sensing diameter, 0.02" thickness, durability, and lightweight (0.25 g). The FSRs was securely embedded into the insole material using a flexible and breathable fabric to ensure comfort and maintain the insole's form factor.

#### iii. Data Acquisition and Processing Unit

The data acquisition and processing unit are consist of a microcontroller module (e.g., 32-bit type or equivalent) and an analog-to-digital converter (ADC). The microcontroller are responsible for reading the analog signals from the FSRs, converting them to digital values using the ADC, and processing the data to determine HS and TO timings. A custom algorithm were developed to analyze the FSR data patterns and accurately identify the HS and TO events based on predefined thresholds and signal characteristics. The analog outputs from each FSR were digitized and simplified into binary values which is '1' for contact with the ground and '0' for no contact. This binary logic enabled efficient real-time classification of gait phases. Heel strike (HS) was defined as the condition when only the back foot force sensor was active (1), while the front foot force sensors were inactive (0). Toe off (TO) occurred when the front foot force sensors were active and the back foot force sensor was inactive, marking the final contact phase before foot lift. If both front and back foot force sensors were active simultaneously, the system interpreted the condition as midstance, where the full foot is grounded.

#### iv. Wireless Communication Module



Authorized licensed use limited to: Malta College of ArtsScience&Tech. Downloaded on November 24,2025 at 11:30:04 UTC from IEEE Xplore. Restrictions apply.

A low-power wireless communication module (e.g., Wi-Fi or Bluetooth Low Energy) was integrated into the system to enable real-time data transmission from the insole to a gateway device or a local server. The wireless module was connected to the microcontroller and configured to transmit the processed HS and TO timing data securely and efficiently.

v. Data Visualization and Analysis Platform

A web-based platform are used to visualize the analyzed results from the gait data received from the insole-based monitoring system. The platform displayed the real-time feedback on ankle dorsiflexion and plantar flexion during gait, based on the HS and TO timings. Additionally, it will provide historical data analysis, gait pattern comparisons, and customizable visualizations to aid in gait rehabilitation and monitoring.

### B. *Experimental Environments*

i. Subject Selection

A healthy male subject from the Universiti Teknologi Malaysia student population was recruited for the study. Participant with no prior history of physiological or neurological conditions that could impair gait are eligible for participation. One subject is tested as a proof-of-concept to verify system functionality and baseline behaviour; a larger clinical study is planned for future work.

ii. Experimental Protocol

The subject was provided with a pair of shoes and one of it equipped with the force-sensing insoles. The subjects was instructed to walk on the ground as shown in Figure 2. The experiment were conducted in three trials with adequate rest periods between trials.

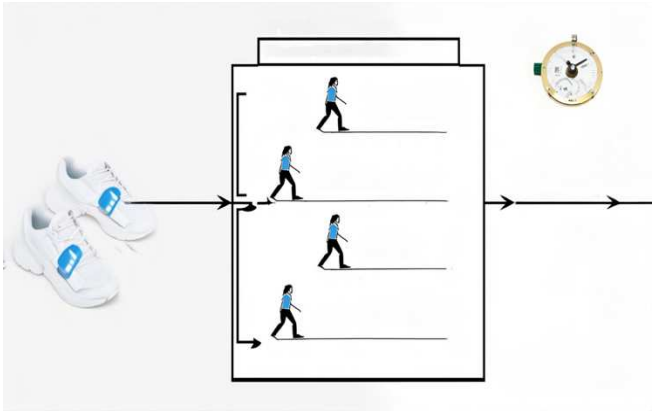

Figure 2 : Experimental environments

iii. Data Collection

During the walking trials, the FSR data from the insoles was collected at a sampling frequency of 60 Hz. The data was processed in real-time by the microcontroller to detect HS and TO timings, which were transmitted wirelessly to the data visualization and analysis platform.

The muscle activation was based on EMG signals. Two Ag/AgCl electrodes with a 10 mm interelectrode distance were placed at the tibialis anterior (TA) and medial gastrocnemius (mGas) muscles. The EMG signals were recorded by using an EMG device. Figure 3 shows the flow of the research.

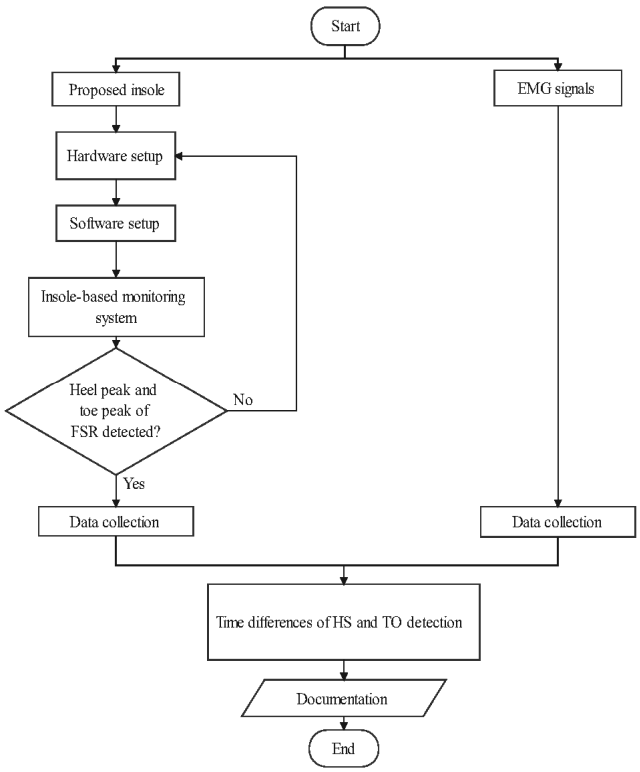


Figure 3 Flowchart of the research

## III. Results and Discussion

The development of an insole-based monitoring system utilizing FSR had been evaluated through HS and TO timings with EMG signals. Figure 4 illustrates the HS, TO and gait phases with the EMG activity TA and mGas muscles over a 6-second walking trial. The HS signal shows three distinct events where the signal transitions from 0 to 1, indicating the contact of the heel with the ground. Correspondingly, the TO signals also displays three clear transitions, signifying the initiation of the swing phase when the toe lifts off the ground. Based on HS and TO timing, gait phase segmentation, alternating patterns between stance (1) and swing (0) phases. The detection of HS and TO events across a 6-second walking trial demonstrates clear and consistent segmentation of gait cycles.

Besides that, the timing relationship is crucial for accurate gait phase determination, as it allows for precise identification of stance and swing phase transitions that are fundamental to effective rehabilitation monitoring. The derived gait phases based on the HS and TO timing data, showed a clear distinction between stance and swing phases across the walking cycles. These findings are consistent with normal walking conditions, where the stance phase occupies



Authorized licensed use limited to: Malta College of ArtsScience&Tech. Downloaded on November 24,2025 at 11:30:04 UTC from IEEE Xplore. Restrictions apply.

approximately 60% of the gait cycle and the swing phase for the remaining 40% [20,21]. The phase detection successfully translated the binary FSR signals into continuous gait phase information, providing a foundation for real-time feedback systems [22]. The consistency of phase transitions across multiple cycles indicates reliable system performance for clinical monitoring applications. Previous research has shown that accurate gait event detection is fundamental to effective gait training interventions, as patients require precise timing information to modify their movement patterns [23].

The segmentation of gait cycles, stance and swing phases of FSR-based insole were compared with EMG signals. The EMG signal of the TA demonstrates increased activity during the swing phase of the gait cycle, aligning with its role in ankle dorsiflexion to clear the foot from the ground. Specifically, bursts of TA activation occur TO and diminish before the next HS, confirming correct muscle recruitment for foot clearance. This pattern supports the potential for using TA activity as a biomarker in foot drop detection, where diminished TA activation may lead to toe dragging or abnormal swing phase dynamics.

Meanwhile for mGas signal, it shows clear activation primarily during the late stance phase, just prior to TO. This corresponds with the muscle's function in plantarflexion to push the body forward during terminal stance. The timing of mGas activity confirms that the muscle is contributing effectively to propulsion. Furthermore, the reciprocal activation pattern between TA and mGas supports the coordination of antagonistic muscle groups required for efficient gait and the finding of this study was in lie with previous studies [24]. This coordination is a key indicator of healthy neuromuscular control.

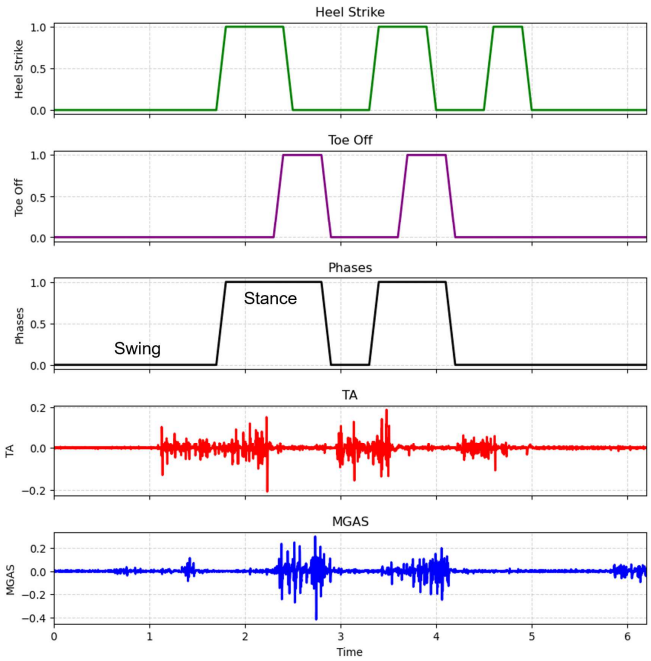


Figure 4: HS and TO detection with EMG signals

## IV. Conclusions

The development and evaluation of an insole-based monitoring system utilizing FSRs have demonstrated reliable detection of critical gait events—HS and TO—which were successfully used to segment gait into stance and swing phases. The system showed consistent performance across multiple gait cycles, with accurate phase transitions that corresponded well with known biomechanical patterns. This confirms the effectiveness of the FSR-based approach in providing real-time gait phase information essential for rehabilitation monitoring.

The EMG analysis further validated the gait segmentation, as the TA and mGas muscles exhibited activation patterns aligned with their respective roles during gait. The TA was predominantly active during swing, supporting its function in dorsiflexion for foot clearance, while the mGas activated during late stance to assist with push-off through plantarflexion. The reciprocal relationship between these muscles indicates coordinated neuromuscular control and reinforces the accuracy of the detected gait phases.

Overall, the integration of FSR-based gait event detection with EMG signal analysis presents a robust framework for gait monitoring and rehabilitation feedback. The system's ability to translate discrete sensor signals into continuous and meaningful gait phase data positions it as a promising tool for clinical applications, particularly for early detection of gait impairments such as foot drop and for guiding patient-specific gait retraining interventions.

However, this insole-based monitoring system has occasional detection lag in FSR signals, which may introduce slight timing errors in HS and TO identification. This can occur due to sensor latency or variations in foot contact pressure that momentarily delay signal transitions. To further enhance the utility and performance of the insole-based monitoring system, several directions are proposed for future work such as, refinement of signal processing and real-time responsiveness, increase the number of subjects and integrate additional sensors such as inertial measurement units or camera.

## Acknowledgment

This work was supported by Universiti Teknologi Malaysia, Potential Academic Staff, Q.K130000.2743.03K52.

## References

[1] Conner BC, Fang Y and Lerner ZF. Under pressure: design and validation of a pressure-sensitive insole for ankle plantar flexion biofeedback during neuromuscular gait training. *J Neuroeng Rehabil.* 2022;19(1):135.

[2] Tan KS, Venketasubramanian N. Stroke Burden in Malaysia. Cerebrovasc Dis Extra. 2022;12(2):58-62.

[3] MacIntosh A, Lam E, Vigneron V, Vignais N and Biddiss E. Biofeedback interventions for individuals with cerebral palsy: a systematic review. Disabil Rehabil 2019; 41:2369–91.

[4] Fang Y, Lerner ZF. Feasibility of augmenting ankle exoskeleton walking performance with step length biofeedback in individuals with cerebral palsy. IEEE Trans Neural Syst Rehabil Eng. 2021;29:442–9

[5] Ávila de Oliveira J, Azzi NM, Coelho DB, Teixeira LA. Differential activation of the plantar flexor muscles in balance control across different feet orientations on the ground. J Electromyogr Kinesiol. 2022;;62:102625.

[6] Namayeshi T, Haddara R, Ackland D, Lee PVS. The role of the ankle plantar flexor muscles in trip recovery during walking: a



Authorized licensed use limited to: Malta College of ArtsScience&Tech. Downloaded on November 24,2025 at 11:30:04 UTC from IEEE Xplore. Restrictions apply.

computational modeling study. Front Sports Act Living. 2023; 5: 1153229.

[7] Lorentzen J, Frisk RF, Nielsen JB, Barber L. Increased Ankle Plantar Flexor Stiffness Is Associated With Reduced Mechanical Response to Stretch in Adults With CP. Front Bioeng Biotechnol. 2021;9:604071

[8] Peters DM, O'Brien ES, Kamrud KE, Roberts SM, Rooney TA, Thibodeau KP, et al. Utilization of wearable technology to assess gait and mobility post-stroke: a systematic review. J NeuroEngineering Rehabil. 2021; 18(1):67

[9] Taborri, J., Palermo, E., Rossi, S. and Cappa, P. Gait Partitioning Methods: A Systematic Review. *Sensors*, 2016; 16(66): 1–20.

[10] Compagnat M, Batcho CS, David R, Vuillerme N, Salle JY, Daviet, JC, Mandigout, S. Validity of the walked distance estimated by wearable devices in stroke individuals. Sensors. 2019 ;19(11):2497.

[11] Hanlon, M. and Anderson, R. Real-time gait event detection using wearable sensors. *Gait & Posture*, 2009; 30: 523–527.

[12] Lee, S.H.; Son, J. Development of a Safety Management System Tracking the Weight of Heavy Objects Carried by Construction Workers Using FSR Sensors. *Appl. Sci.* 2021; *11*, 1378.

[13] Guo, Y. An Insole Device Based on Piezoelectric Sensor to Assess Plantar Pressure during Daily Human Activity. *Sens. Transducers J.* 2012; 147, 53–60.

[14] Jacobs D, Farid L, Ferré S, Herraez K, Gracies JM, Hutin E. Evaluation of the Validity and Reliability of Connected Insoles to Measure Gait Parameters in Healthy Adults. Sensors (Basel). 2021;21(19):6543 .

[15] Farid L, Jacobs D, Do Santos J, Simon O, Gracies JM, Hutin E. FeetMe® Monitor-connected insoles are a valid and reliable alternative for the evaluation of gait speed after stroke. Top Stroke Rehabil. 2021;8(2):127-134.

[16] Parati M, Gallotta M, Muletti M, Pirola A, Bellafà A, De Maria B, Ferrante S. Validation of Pressure-Sensing Insoles in Patients with Parkinson's Disease during Overground Walking in Single and Cognitive Dual-Task Conditions. Sensors (Basel). 2022;22(17):6392.

[17] Granja Domínguez A, Romero Sevilla R, Alemán A, Durán C, Hochsprung A, Navarro G, Páramo C, Venegas A, Lladonosa A, Ayuso GI. Study for the validation of the FeetMe® integrated sensor insole system compared to GAITRite® system to assess gait characteristics in patients with multiple sclerosis. PLoS One. 2023;18(2):e027259

[18] Neumann S, Bauer CM, Nastasi L, Läderach J, Thürlimann E, Schwarz A, Held JPO, Easthope CA. Accuracy, concurrent validity, and test-retest reliability of pressure-based insoles for gait measurement in chronic stroke patients. Front Digit Health. 2024;6:1359771.

[19] Donovan L, Feger MA, Hart JM, Saliba S, Park J, Hertel J. Effects of an auditory biofeedback device on plantar pressure in patients with chronic ankle instability. Gait Posture. 2016;44:29–36.

[20] P. Parashar *et al.*, "Machine learning-driven gait-assisted self-powered wearable sensing: a triboelectric nanogenerator-based advanced healthcare monitoring," *J. Mater. Chem. A*, vol. 13, no. 19, pp. 13750–13762, 2025, doi: 10.1039/d4ta07496c.

[21] M. Salminen, J. Perttunen, J. Avela, and A. Vehkaoja, "A novel method for accurate division of the gait cycle into seven phases using shank angular velocity," *Gait Posture*, vol. 111, no. January, pp. 1–7, 2024, doi: 10.1016/j.gaitpost.2024.04.006.

[22] Park, J. S., & Kim, C. H. Continuous Gait Phase Estimation for Multi-Locomotion Tasks Using Ground Reaction Force Data. *Sensors*, 2024,*24*(19), 6318.

[23] Wang, S., Omar, K. S., Miranda, F., & Bhatt, T. Automatic gait event detection in older adults during perturbed walking. *Journal of NeuroEngineering and Rehabilitation*, 2025, *22*(1).

[24] N Nazmi, MAA Rahman, SI Yamamoto, SA Ahmad. Walking gait event detection based on Electromyography signals uding artificial neural network. Biomedical Signal Processing and Control 2019; 47, 334-343.



Authorized licensed use limited to: Malta College of ArtsScience&Tech. Downloaded on November 24,2025 at 11:30:04 UTC from IEEE Xplore. Restrictions apply.